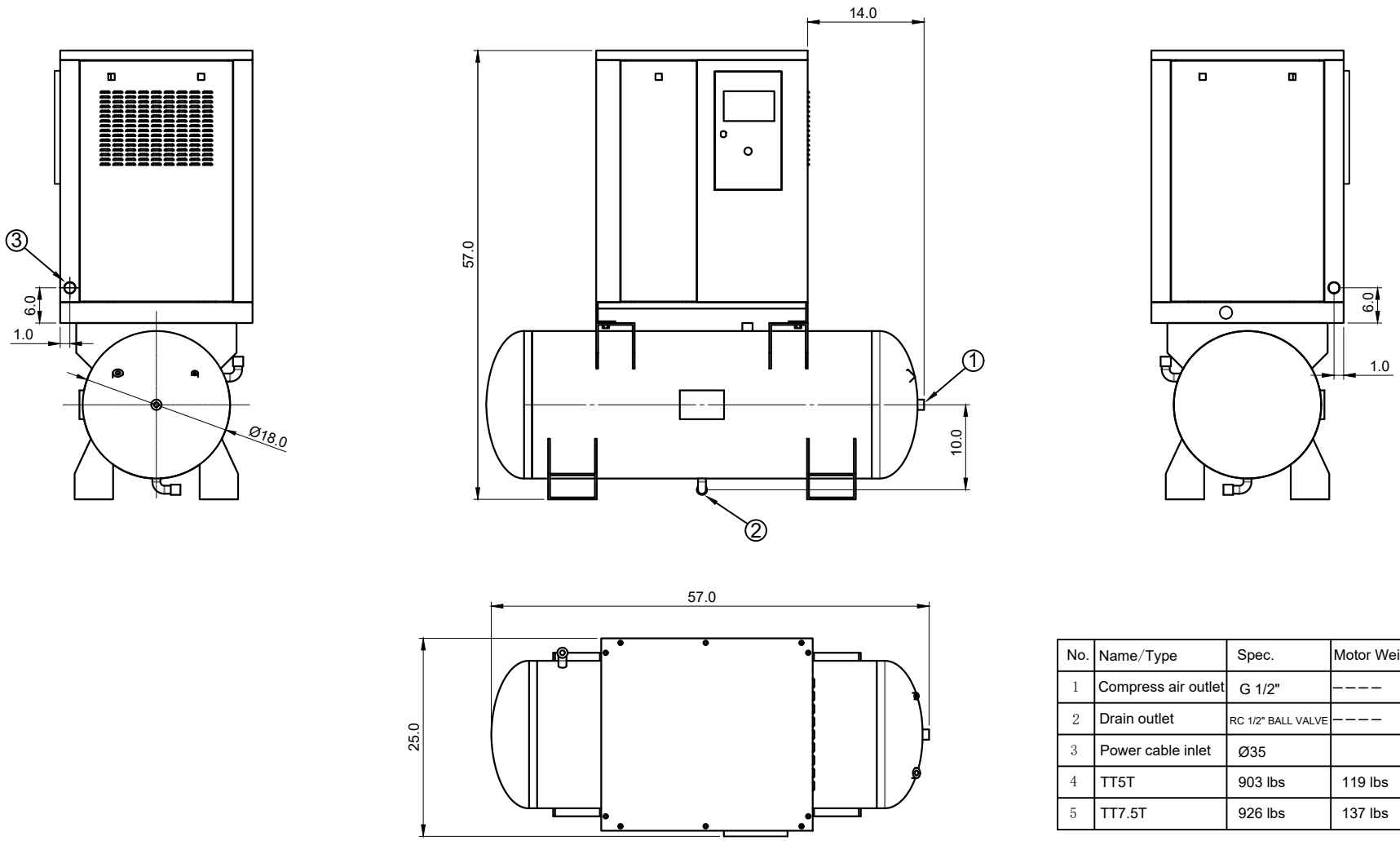

No.	Name/Type	Spec.	Motor Weight
1	Compress air outlet	G 1/2"	----
2	Drain outlet	RC 1/2" BALL VALVE	----
3	Power cable inlet	Ø35	
4	TT5T	903 lbs	119 lbs
5	TT7.5T	926 lbs	137 lbs

TOLERANCE UNLESS NOTED
DECIMALS xx = ± .010;xxx = ± .005
FRACTIONS
FORMED OR CAST = ±1/32
MACHINED = ± 1/64
ANGULAR AND PARALLELISM
FORMED OR CAST = ± .5°
MACHINED = ± 1°
SURFACE FINISH
REMOVE ALL BURRS
DO NOT SCALE DRAWING

ECN Number	Revision	Modification	Date	By	App
-	A	NEW RELEASE	07/09/24	RC	DN

Drawing standard: ANSI	General Tolerances: ANSI B4.1	Scale: NTS	Drawing status: CURRENT RELEASE
Current revision: A			
Higher level assembly: -	Material: -	Unit: in	Description: TT5- TT7.5T GENERAL ARRANGEMENT
Model: -	Weight: -	Sheet format: A	
Drawn: RC	Date: 07/09/24	Finish: -	Part number: TT5-7.5TGA
Verified: KG	Date: 07/09/24	Sheet: 1 of 1	Projection method: Third angle
Approved: DN	Date: 07/09/24		

ST. LOUIS, MO
TOLEDO TOOLS
USA

Distribution, utilization or the communication to third parties without our approval obliged to pay damages and is punishable to all the applicable laws.
We reserve all rights in the case of patent award or utility entry Curtis-Toledo, Inc., 1905 Kienlen Avenue , St. Louis , MO , 63133 , United States.